CONCRETE BOOM PUMP · GENERAL ARRANGEMENT

HR21-4ZR

HR CONCRETE PUMPS

Side view · dimensions and axle weights

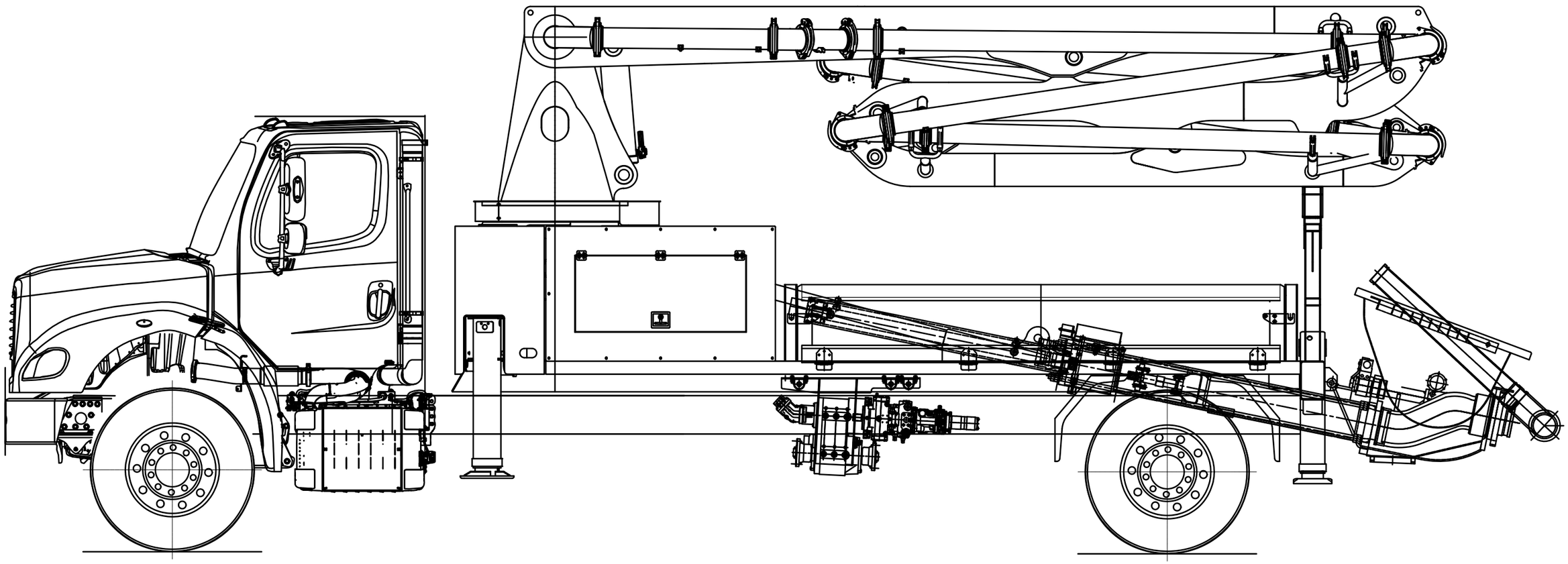

5,256 kg	8,942 kg	Total : 14,198 kg
11,587 lb	19,714 lb	Total : 31,301 lb

※ All technical data are theoretical values, and specifications are subject to change without prior notice due to continuous product improvement.
※ Subject to change depending on the chassis specifications.

HR CONCRETE PUMPS — Concrete boom pumps — **HR21-4ZR**

TITLE	MODEL
General arrangement — side view	HR21-4ZR