CONCRETE BOOM PUMP · DIMENSIONS

HR21-4ZR

HR CONCRETE PUMPS

Transport position · overall dimensions

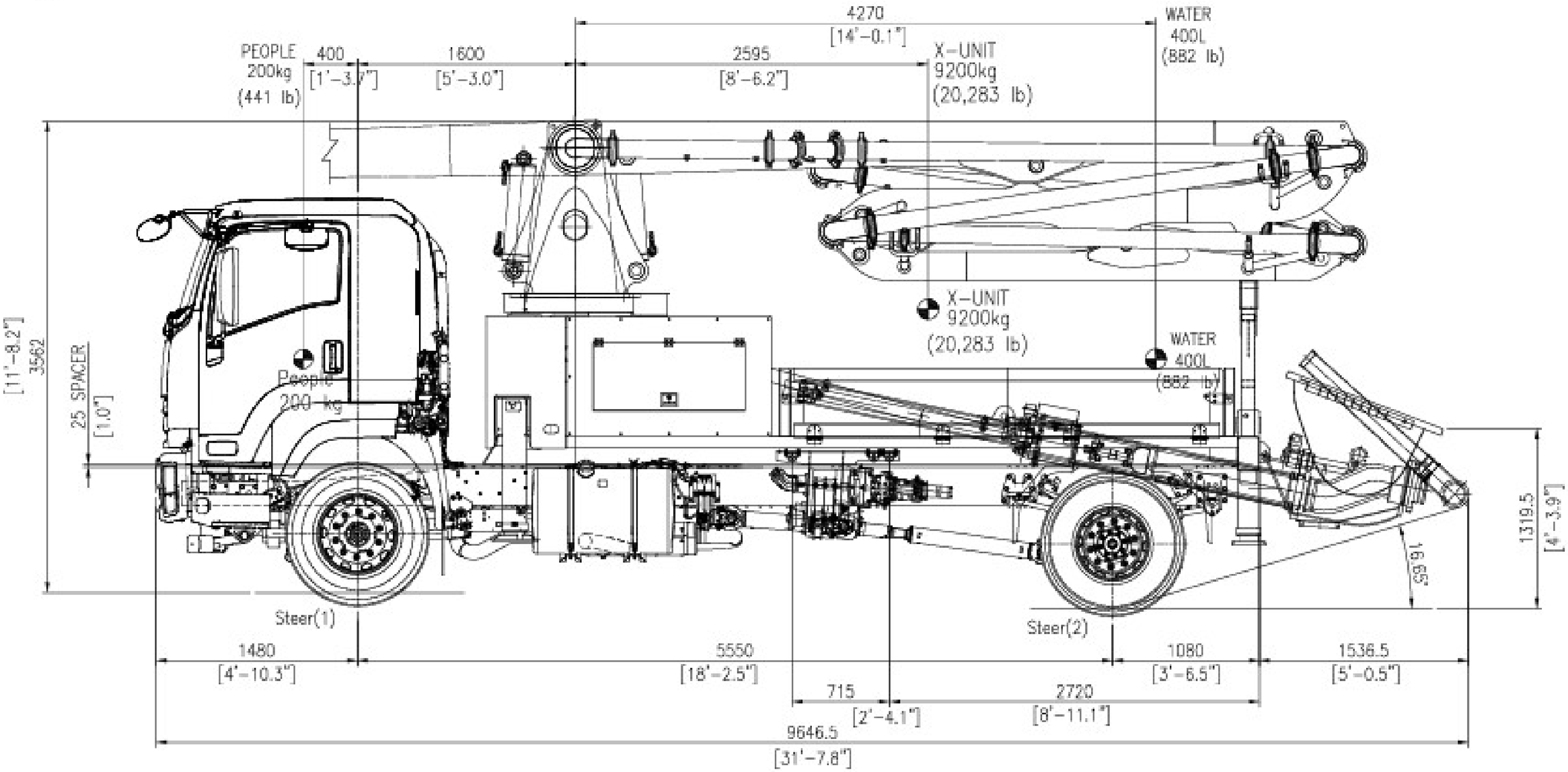

※ All technical data are theoretical values, and specifications are subject to change without prior notice due to continuous product improvement.
※ Subject to change depending on the chassis specifications.

HR CONCRETE PUMPS
Concrete boom pumps

HR21-4ZR

TITLE	MODEL
Dimension drawing	HR21-4ZR