CONCRETE BOOM PUMP · GENERAL ARRANGEMENT

HR28-4Z

HR CONCRETE PUMPS

Side view · dimensions and axle weights

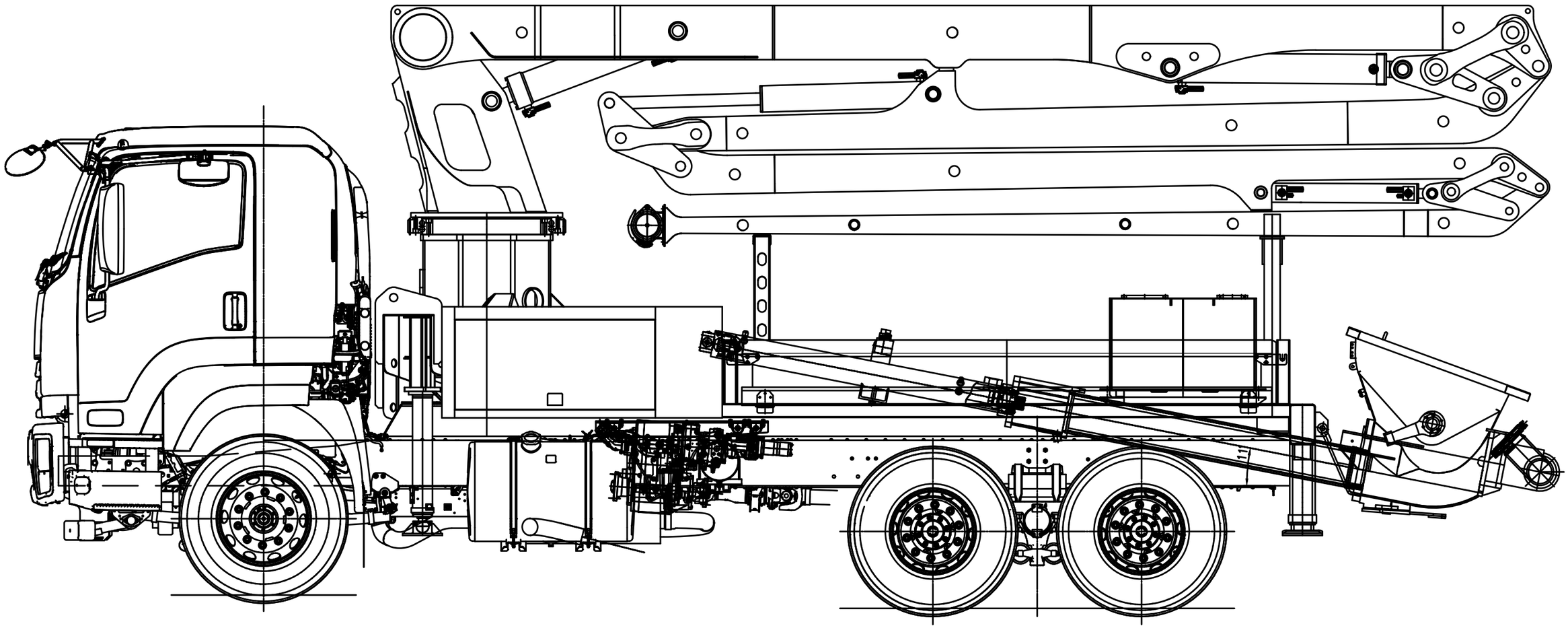

6,330 kg	6628 kg	6627 kg	Total : 19,585 kg
13,955 lb	14,612 lb	14,612 lb	Total : 43,178 lb

※ All technical data are theoretical values, and specifications are subject to change without prior notice due to continuous product improvement.
※ Subject to change depending on the chassis specifications.

HR CONCRETE PUMPS
Concrete boom pumps

HR28-4Z

TITLE	MODEL
General arrangement — side view	HR28-4Z