CONCRETE BOOM PUMP · DIMENSIONS

HR32-5Z

HR CONCRETE PUMPS

Transport position · overall dimensions

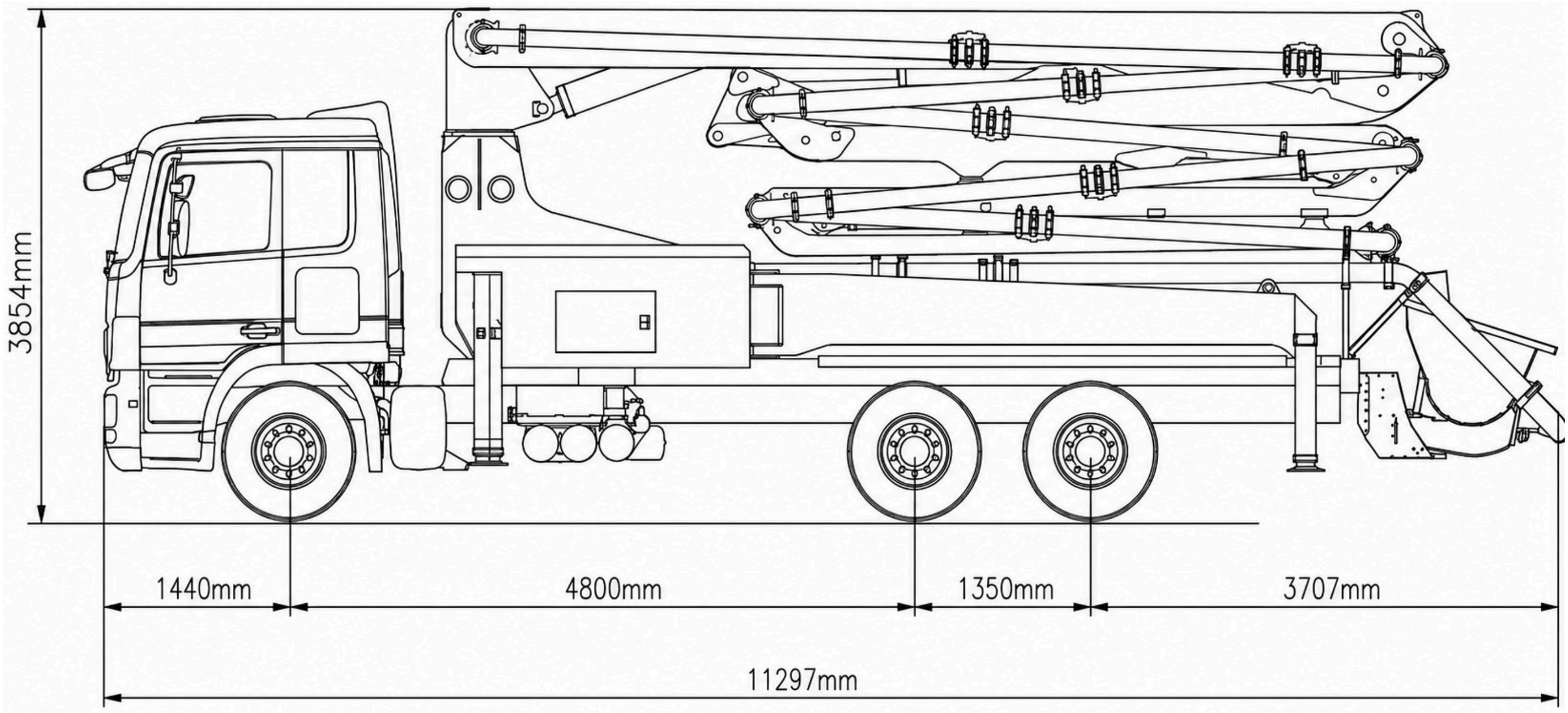

※ All technical data are theoretical values, and specifications are subject to change without prior notice due to continuous product improvement.
※ Subject to change depending on the chassis specifications.

HR CONCRETE PUMPS
Concrete boom pumps

HR32-5Z

TITLE	MODEL
Dimension drawing	HR32-5Z