CONCRETE BOOM PUMP · GENERAL ARRANGEMENT

HR38-5RZ

HR CONCRETE PUMPS

Side view · dimensions and axle weights

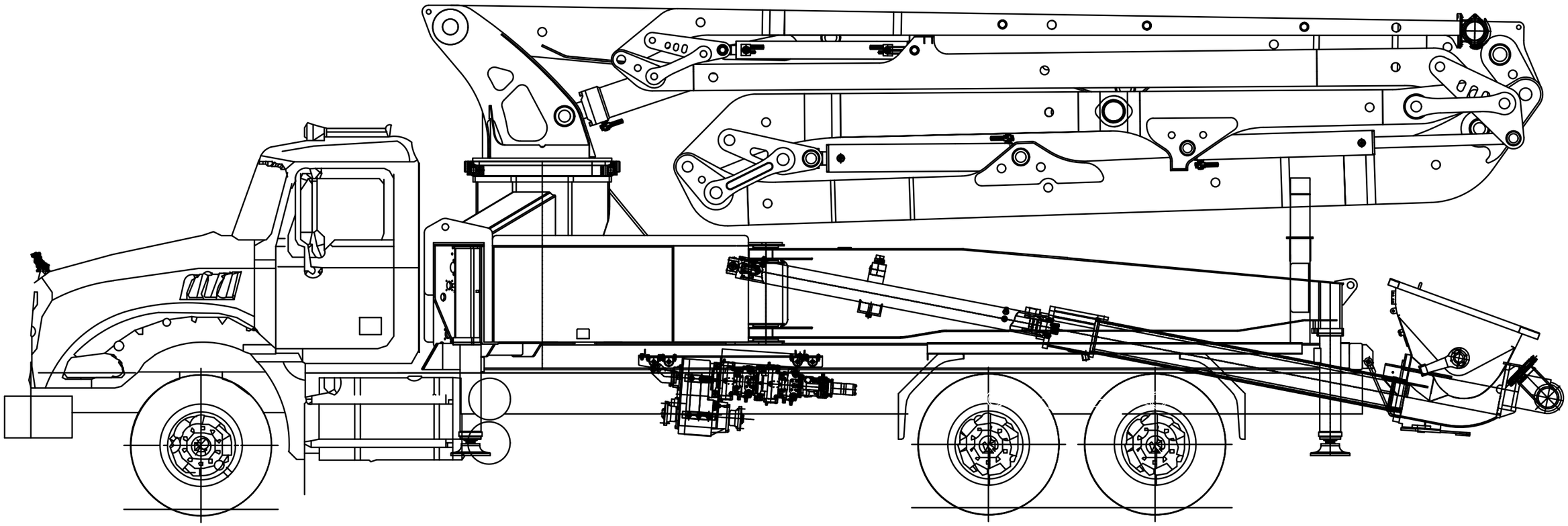

7,003 kg
[15,439 lb]

8,933 kg
[19,694 lb]

8,933 kg
[19,694 lb]

24,869 kg
[54,827 lb]

※ All technical data are theoretical values, and specifications are subject to change without prior notice due to continuous product improvement.
※ Subject to change depending on the chassis specifications.

HR CONCRETE PUMPS
Concrete boom pumps

HR38-5RZ

TITLE	MODEL
General arrangement — side view	HR38-5RZ