CONCRETE BOOM PUMP · GENERAL ARRANGEMENT

HR40-5RZ

HR CONCRETE PUMPS

Side view · dimensions and axle weights

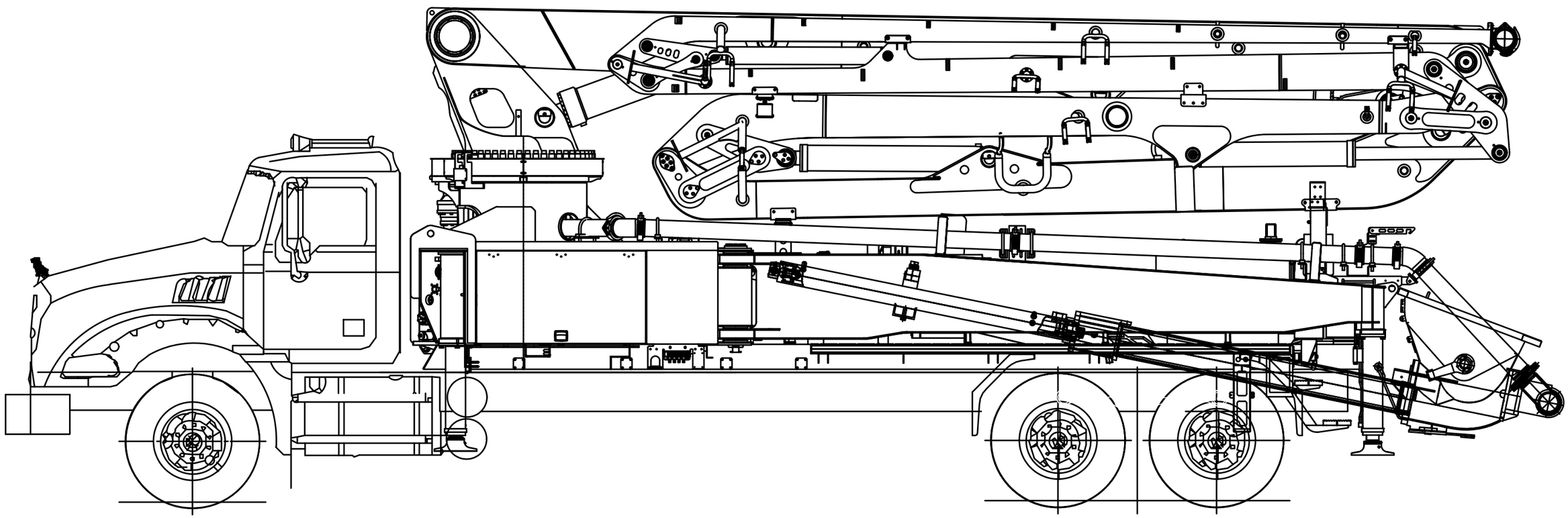

8,947 kg	9,111 kg	9,111 kg	Total : 27,169 kg
19,725 lb	20,086 lb	20,086 lb	Total : 59,897 lb

※ All technical data are theoretical values, and specifications are subject to change without prior notice due to continuous product improvement.
※ Subject to change depending on the chassis specifications.

HR CONCRETE PUMPS
Concrete boom pumps

HR40-5RZ

TITLE	MODEL
General arrangement — side view	HR40-5RZ