CONCRETE BOOM PUMP · GENERAL ARRANGEMENT

HR40-5RZ

HR CONCRETE PUMPS
Chassis drawing · WB 7,550 mm

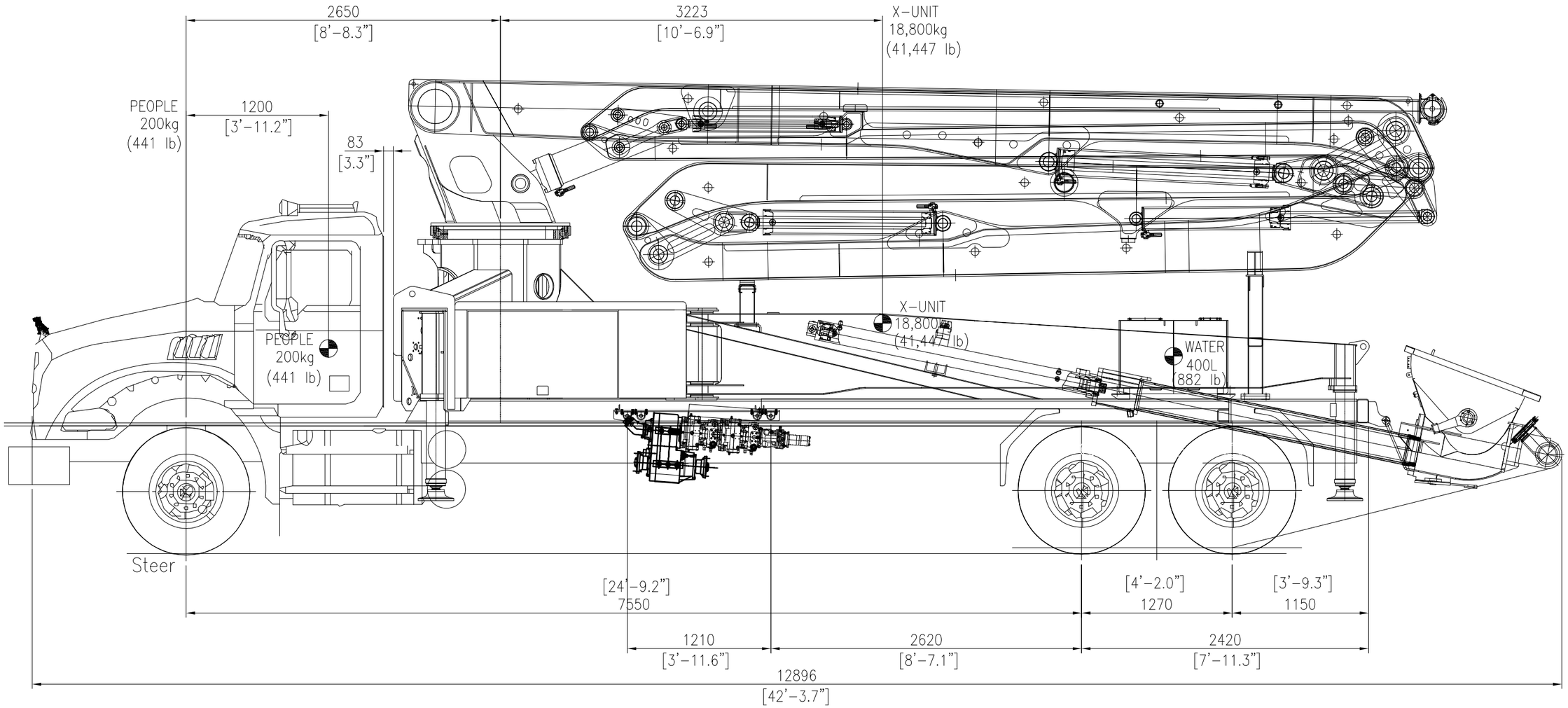

※ All technical data are theoretical values, and specifications are subject to change without prior notice due to continuous product improvement.
※ Subject to change depending on the chassis specifications.

HR CONCRETE PUMPS
Concrete boom pumps

HR40-5RZ

TITLE	MODEL
General arrangement — WB 7,550 mm	HR40-5RZ