CONCRETE BOOM PUMP · GENERAL ARRANGEMENT

HR42-5RZ

HR CONCRETE PUMPS

Side view · dimensions and axle weights

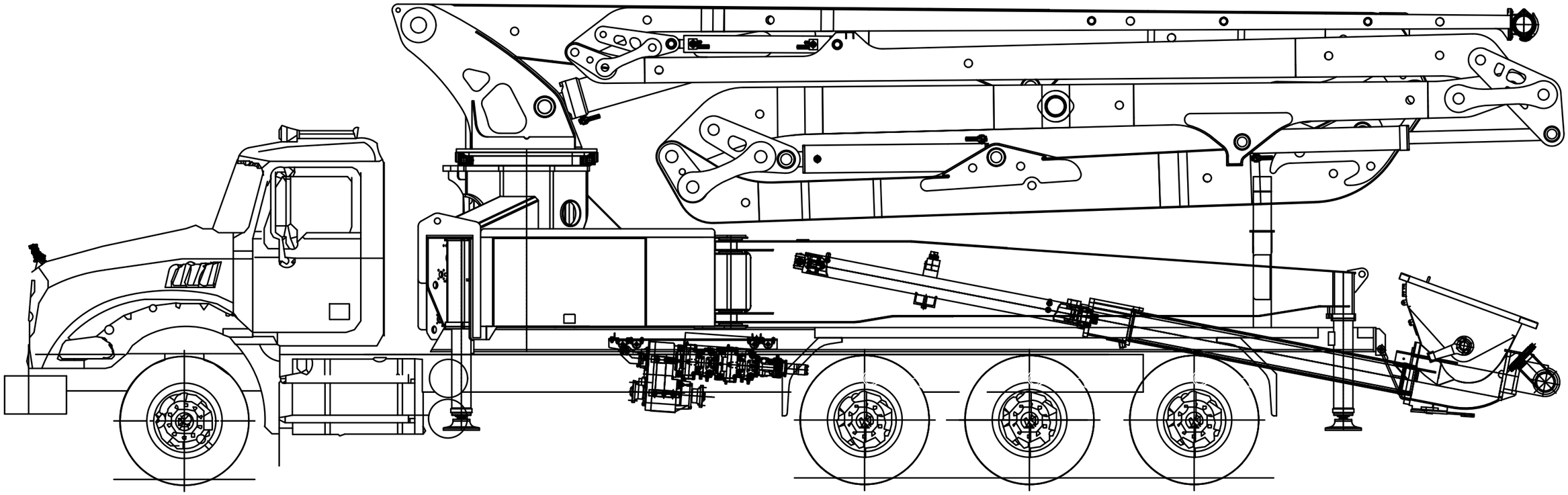

7,373 kg	7,500 kg	7,651 kg	7,651 kg	Total : 30,175 kg
16,255 lb	16,535 lb	16,868 lb	16,868 lb	Total : 66,524 lb

※ All technical data are theoretical values, and specifications are subject to change without prior notice due to continuous product improvement.
※ Subject to change depending on the chassis specifications.

HR CONCRETE PUMPS
Concrete boom pumps

HR42-5RZ

TITLE	MODEL
General arrangement — side view	HR42-5RZ